DWG. NO.
PBF5X7–X

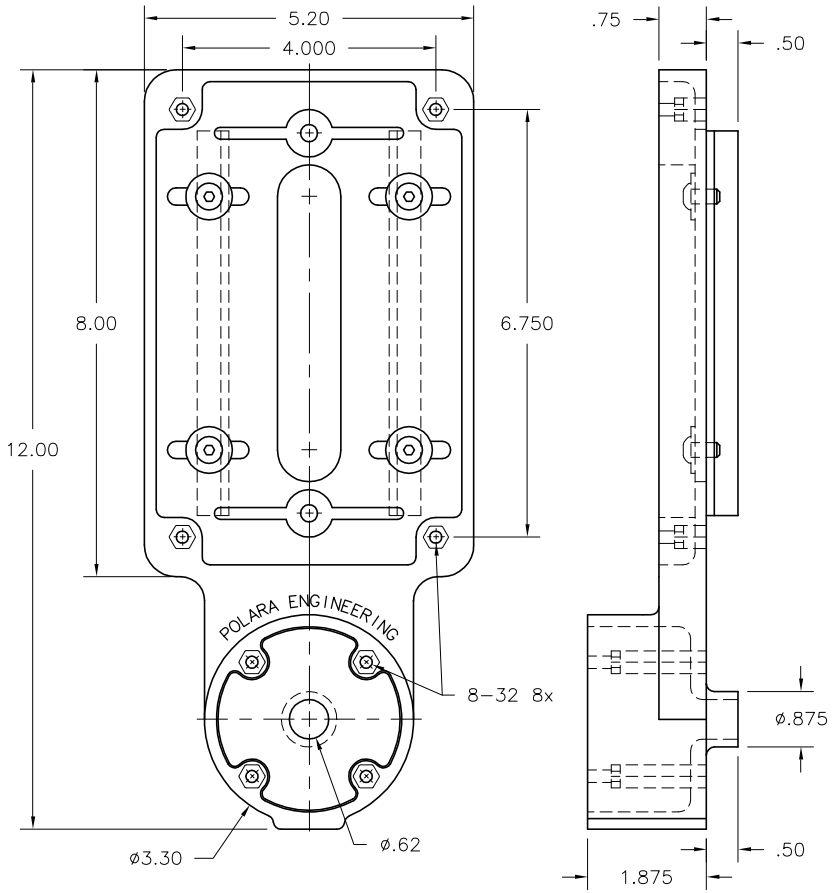

Polara Engineering's Push Button Frames are designed to mount on a 2½" diameter pole up to a 24" diameter pole, or a flat surface. Their cast aluminum structure and powder coated finish provides a very strong and attractive mount for a pedestrian push button and sign.

Polara's frame is unique from other companies frames in that other companies typically drill and tap holes directly into the aluminum of the frame. When a dissimilar metal screw is installed to hold the button or sign, bi–metal corrosion occurs between the screw and aluminum. When the screws need to be removed they often break or strip out the threads. This renders the frame useless requiring a new frame to be installed, or significant time must be spent drilling and installing inserts or tapping new holes.

Polara does not drill and tap directly into the aluminum. Instead we install stainless steel nuts, that when used with stainless steel screws, eliminate the bi–metal corrosion problem. You should never have a frozen screw or stripped thread. In the unlikely event that you do, simply push out the nut, install a new nut and screw, and your work is done.

To designate color replace "X" in part number with:

- "U" for Unfinished
- "B" for Black
- "G" for Green
- "Y" for Yellow

Material: Aluminum

REV. DATE	LTR	E.C.O. NO.	BY	CKR	ENG	DSN	MFG	QA	FNL
05–23–02	A	21850	BB						

Revised – 05/23/02

POLARA ENGINEERING INC.
4115 W. ARTESIA AVE. FULLERTON, CA. 92833

TOLERANCES: .XXX ±.005 .XX ±.02 (EXCEPT AS NOTED)				SCALE N/A
DRAWN BY BB	CKR. CLM	ENG. MGR. LB	MFG. MGR. WH	SHEET 1 OF 1
DATE 07–12–01	DSN. ENG. WR	Q.A. APP. RVC	FINAL APP. JMc	USE
TITLE 5 x 7 FRAME				DWG. NO. PBF5X7–X

INFORMATION ON THIS DOCUMENT IS PROPRIETARY TO POLARA AND SHALL NOT BE USED, COPIED, REPRODUCED OR DISCLOSED IN WHOLE OR IN PART WITHOUT WRITTEN CONSENT OF POLARA.